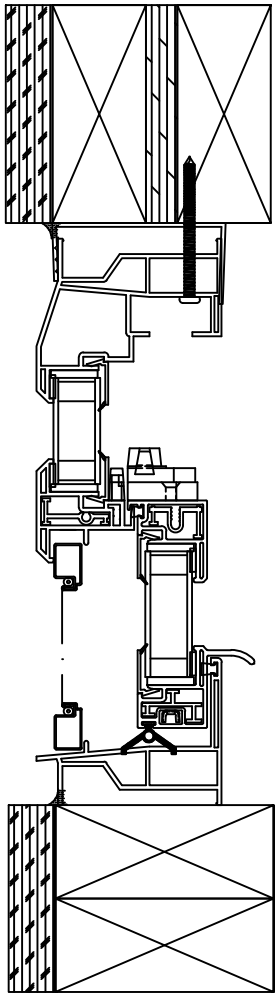

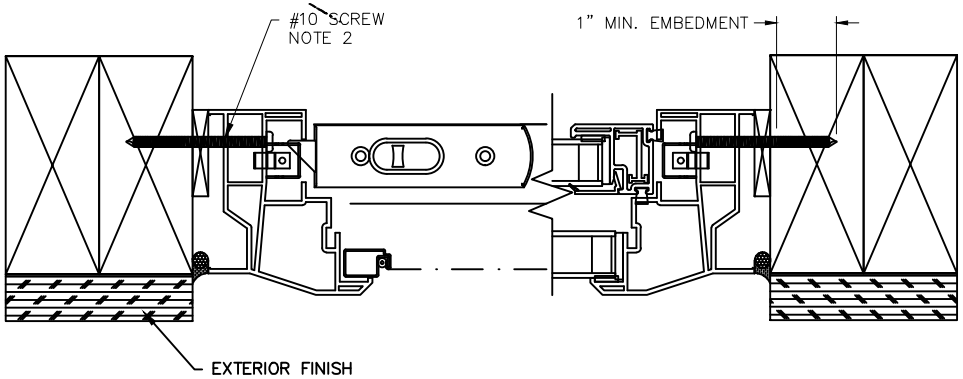

Table 1 –Verified Installations			
Certification	DP (psf)	WIDTH (in)	HEIGHT (in)
Single Hung	+/– 25.0	48	78
Single Hung	+/– 50.0	36	74

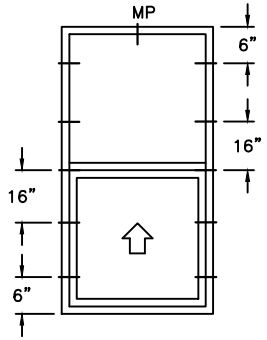

Elevation View

NOTES:

1. INSTALLATIONS SHOWN ON THIS DRAWING HAVE BEEN VERIFIED AS THE AS–TESTED INSTALLATION FOR THE PERFORMANCE LEVEL SHOWN. VERIFIED PRODUCTS ARE LISTED IN TABLE 1. THIS DRAWING APPLIES ONLY TO THOSE PRODUCTS.
2. INSTALLATION ANCHORS SHALL BE #10 SCREWS OF SUFFICIENT LENGTH TO ACHIEVE MINIMUM EMBEDMENT OF 1.5" INTO WOOD FRAMING MEMBER. SCREWS SHALL SATISFY NATIONAL DESIGN SPECIFICATION FOR MATERIAL PROPERTIES AND DIMENSIONS. EDGE DISTANCES SHALL BE MINIMUM $\frac{3}{8}$" PER CURRENT NDS.
3. WOOD FRAMING SHALL BE SPRUCE–PINE–FIR (G=0.42) OR DENSER.
4. ANCHORS SHALL BE LOCATED WITHIN 1/2" OF THE INDICATED LOCATIONS. MAX SHIM SPACE IS 1/4". SPACES GREATER THAN 1/16" REQUIRE THE USE OF LOAD BEARING SHIMS.
5. INSTALLATION ANCHORS SHALL BE LOCATED AS FOLLOWS:
   5.1. JAMBS– 6" FROM CORNERS AND 16" ON CENTER THEREAFTER
   5.2. HEAD– AT THE MIDPOINT.
6. THESE INSTRUCTIONS ADDRESS STRUCTURAL REQUIREMENTS ONLY. WINDOWS SHALL BE INSTALLED PER ASTM E2112 OR FMA/AAMA 100.
7. SMALLER WINDOWS OF THE SAME CONSTRUCTION AND EQUAL OR LESSER DESIGN PRESSURES ARE COVERED BY THIS DRAWING.
8. GLAZING TYPE, GLASS TYPE, AND GLASS THICKNESS ARE ESTABLISHED BY THIS CERTIFICATION AND SHALL SATISFY ASTM E1300. GLAZING TYPE SHALL BE INSULATING GLASS.
9. PRODUCTS LISTED IN TABLE 1 ARE NOT IMPACT RESISTANT. IF USED IN WIND–BORNE DEBRIS REGIONS, APPROVED PROTECTION DEVICES ARE REQUIRED.
10. PRODUCT OR INSTALLATION IS NOT APPROVED FOR HIGH VELOCITY HURRICANE ZONE (HVHZ)AS DEFINED BY THE FLORIDA BUILDING COMISSION.

THIS DRAWING IS PROPRIETARY AND CONFIDENTIAL TO ATRIUM COMPANIES, INC. AND SHALL NOT BE REPRODUCED, COPIED, OR DISSEMINATED WITHOUT THE EXPRESSED WRITTEN PERMISSION OF ATRIUM COMPANIES, INC.

ATRIUM COMPANIES, INC.

No.	Date	Revision Description	By	ECN #
--	----	-------	---	------
1	9/8/2025	Updated to current FBC	LH	------

Material (Type–Alloy–Temper): ----	Est. Area (in²): NA Est. Weight (lb/ft): NA	Tolerances: X.XX = ±X.XX X.XXX = ±X.XXX X.X° = ±X.X°	
Drawn By: JTS	Approved By: DJC	Date: 10 MARCH 2009	Scale: 1:2	Sheet Size: ANSI B
ECN# (initial issue): ECN–2008–1395J	File Name: ADW–08 8100 SH INSTALLATION INSTRUCTIONS			Sheet 1/2

Title: Atrium Windows and Doors
8100/1100/3100/10/1000/200 Single Hung
Finless Installation